Reprinted from the *Students' Journal*, Vol. 14, No. 3, 1973, pp. 131-155

Electronic Aids to Air Traffic Control

F. W. KIME*

Manuscript received on 1 *June* 1972

The organization of Air Traffic Control arises from international agreements and its purpose is to expedite the free flow of traffic, both nationally and internationally. Within the terms of these agreements, it is the responsibility of the Air Traffic Control Authorities of each country to arrange for the movement of aircraft through the area under their jurisdiction in safety. To achieve this, for many years air traffic has been channelled along airways which are effectively corridors in the sky, stretching from 3000 feet upwards outside terminal areas and down to ground level within the terminal areas. Given adequate ground to air communications facilities and basic navigational aids, the *en route* control of a limited number of aircraft can be handled satisfactorily by purely procedural arrangements but as the traffic density increases and the range of operating speeds widens, the problem confronting the ground Air Traffic Control organization becomes more complex. In this paper some of the ways in which modern electronic equipment can help the Air Traffic Controller are discussed.

THE AIR TRAFFIC CONTROL PROCESS

Air Traffic Control is, at present, a two-stage process, the first stage being the flight planning when the aircraft is on the ground and the second stage is the *en route* control after the aircraft is airborne. Basic procedural control of flight patterns is established by the flight planning process during which a plan submitted by the pilot informs all concerned of his intention and gets a clearance for a flight along a particular route. By this means a knowledge of the aircraft type, call sign, aerodrome of departure, proposed departure time, proposed airspeed, desired flight level and airport of first landing is given, together with an estimated time of arrival. This information will be correlated with other known aircraft movements to check for possible conflicts and, if necessary, amendments will be made before a clearance is issued. This information is all assembled on to strips of paper known as flight progress strips. When the aircraft departs, the estimated times of arrival over reporting points can be calculated and the flight progress strips are posted on a board showing the reporting points for the area concerned.

After take-off, dynamic control of aircraft movements is necessary and precise positional information is required if the Controller is to be able to space his traffic by separation distances which are not going to restrict the airport handling capacity. For this purpose primary radars have long been employed, first they were used in the crowded terminal areas, but recently overall airway and airspace surveillance cover has been extending. Whilst primary radar is capable of giving good positional data

---

*Engineer, Marconi Co., Chelmsford, Essex, England.

and in some cases, height, it suffers from the fact that no identity information is available and that the picture is confused by unwanted returns from objects which look like aircraft. Returns from surrounding terrain, especially under anomalous propagation conditions, from birds, clouds and precipitation all clutter the primary radar picture. However, by choice of a suitable wavelength and by use of electronic signal processing techniques such as MTI, pulse length discrimination and swept gain control, much has been done to alleviate these difficulties. In order to provide identity and more accurate height information, secondary surveillance radars have been introduced and the fitting of transponders for aircraft flying above specified height levels in certain areas is now mandatory. Since the operating speeds of aircraft are becoming greater and because carefully controlled flight path patterns are desirable for economic operation of long range high speed jet transports, it is necessary for the Controller to consider the pattern of traffic flow over a greater area before deciding on clearances for new aircraft entering his control zone. In this situation it is most important to relieve the Air Traffic Controllers as far as possible from any work which is purely routine and to give them the information with minimum time delays, and in a form which is readily understandable. Modern electronic techniques are capable of providing massive assistance in this field but the extent to which these are applied must, of course, depend upon the complexity of the air traffic at the particular centre.

EXTENT OF AIR TRAFFIC CONTROL FACILITIES REQUIRED

In simple Air Traffic Control situations, the traffic density may never exceed that which can be handled safely and effectively by manual data transfer. For these cases it may be quite adequate to rely upon conventional radar plan position displays used in conjunction with flight progress boards, there being time to associate the radar returns with the flight strips and establish identity by requesting procedural turns and by voice communication with the aircraft.

As the traffic increases data handling aids can be added to the raw radar displays and for many years a number of Air Traffic Centres have used simple aids based on analogue techniques. Electronic strobe markers on the radar picture provide such facilities as: (a) Measurement of range and bearing between an aircraft and any other location on the displayed picture; (b) inter-console marking to facilitate hand-over from one sector to another or from airways to approach control; (c) superimposition of ADF lines on the radar displays; and (d) manual tracking on an aircraft response by the marker.

The same techniques are also used to position secondary radar selection gates and obtain further information on identity and height with the presentation of such information on a Controller's request basis against a particular response.

Such systems provide limited facilities but do not allow ready correlation with data from other sources and difficulties arise in the simultaneous presentation of signals from more than one radar. This latter restriction becomes more pronounced in areas with considerable overflying traffic in the upper air space because the loss of signals due to the zenithal cone extends for many miles in most cases and signals from contiguous areas would normally be required to fill this gap. It is also economically desirable to be able to combine the information derived from the higher power military radars with that provided by the radars of the civil authorities to obtain the best possible cover from the equipment available.

In Air Traffic Control Centres using such facilities, manual association of the radar picture with the flight progress boards remains necessary. When conventional displays using fluoride or similar phosphors are used for the radar picture, special consideration must be given to the lighting arrangements. Improvements may be introduced by use of bright displays, which are also of great assistance to the Airfield Controllers who must work in daylight conditions.

Into any of these organizations, a flight plan processing computer could be added to assist in clearing flight plans and thus relieve the Controllers in this part of the task.

Finally, in the large centres where air traffic is dense and complex, and the strain on a manually controlled system becomes excessive, the rapid handling of large quantities of data can be carried out by electronic data processors. These machines operate directly on-line with the signals from the radar, flight plan and other data. The following facilities become available when automatic data processing machines are introduced:

(a) *Marked Raw Radar Displays,* showing the radar signals with labels giving identity or altitude positioned alongside the returned echo. The tracking of the aircraft may be carried out either manually or automatically using primary or secondary radar and the dynamic picture can be automatically correlated with the flight plan information. The marking on the radar display takes the form of groups of alphanumeric characters which remain bright and flicker-free. By use of selection techniques the presentation of markers on the display may be limited to only those in which the Controller has a definite interest, e.g. to all inbound tracks or outbound tracks or to those tracks in a particular height band.

(b) *Synthetic Displays,* which give a labelled plan of the air situation. On these displays a plan picture of all aircraft movements entered into the system may be presented; this can cover up-to-date radar information and/or extrapolated flight plan information, with appropriate indications of data source so denoting the accuracy with which the data can be regarded. As with the marked radar displays category selection and variation of label content may be provided.

(c) *Electronic Data Displays,* on which can be shown the full flight information from the data store. It would clearly cause confusion if one attempts to put all this information on the synthetic picture and so a specialized display form is arranged to permit the display, in tabulated form, of full information on selected flights thus supplementing the plan position data.

(d) *Conflict Prediction* may be carried out continuously against specified criteria for aircraft on conflict courses and warning given to the Air Traffic Controller. This data may be given on specialized displays, or, alternatively, by modifying the characters presented on the plan position and tabular displays. For example, the character groups of the two conflicting aircraft may be made to wink to attract attention.

(e) *Sequence Control* is another problem which the computer can tackle, here again the resulting information may be presented on the labelled plan or tabular displays.

(f) *Communications Control* may also be automated, up-to-date dynamic information being routed out on data links to adjacent flight information regions, whilst in-coming information from other centres is taken directly into the data processor for correlation with local data.

In an automatic data handling environment certain semi-static data such as meteorological infomation may be stored electronically and superimposed on the plan position displays. Alternatively, television may be useful for its dissemination with the additional facility of viewing ground movements.

SYSTEMS FOR AUTOMATIC DATA PROCESSING IN AIR TRAFFIC CONTROL

From the data handling point of view it is convenient to consider the automation of Air Traffic Control as two separate systems, viz. (i) the flight plan processing system, where long term storage of aircraft performance data and aircraft movements are processed in an initial planning phase, which is akin to commercial computing techniques; (ii) the radar data processing system where rapid handling of large quantities of radar data calls for a specialized computer complex designed to integrate closely with the radar sensors and display systems.

FLIGHT PLAN PROCESSING SYSTEM

One example of the system used for flight plan processing is the installation operating for the British Civil Aviation Authority at London Air Traffic Control Centre. In operation data on all planned movements are entered into the system, flight clearances are approved and presented to the Air Traffic Controller who can modify as necessary during the active flight phase. Records of all

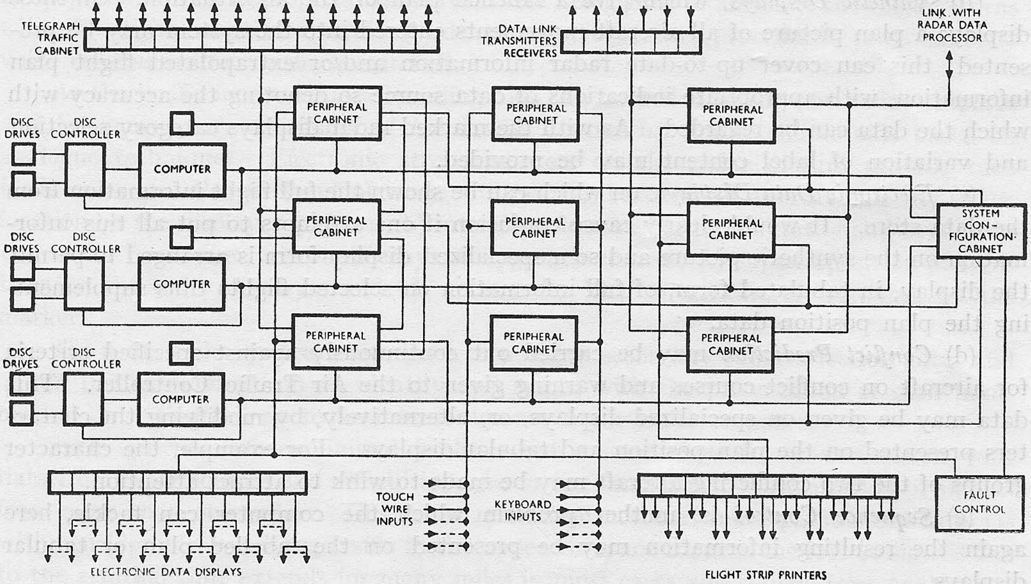

F.P.P.S – CENTRAL FACILITIES

Fig. 1 — Block diagram of control complex

F.P.P.S – TYPICAL OPERATIONAL SEQUENCES

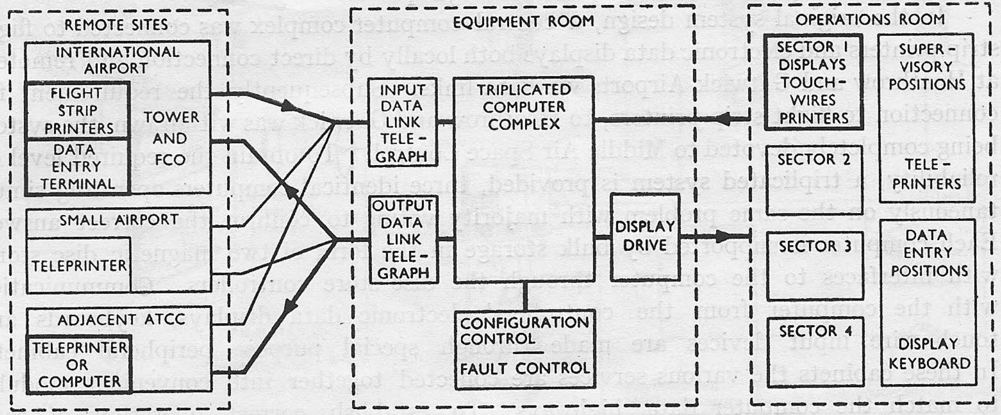

OUTBOUND FLIGHT FROM INTERNATIONAL AIRPORT TO ADJACENT ATCC

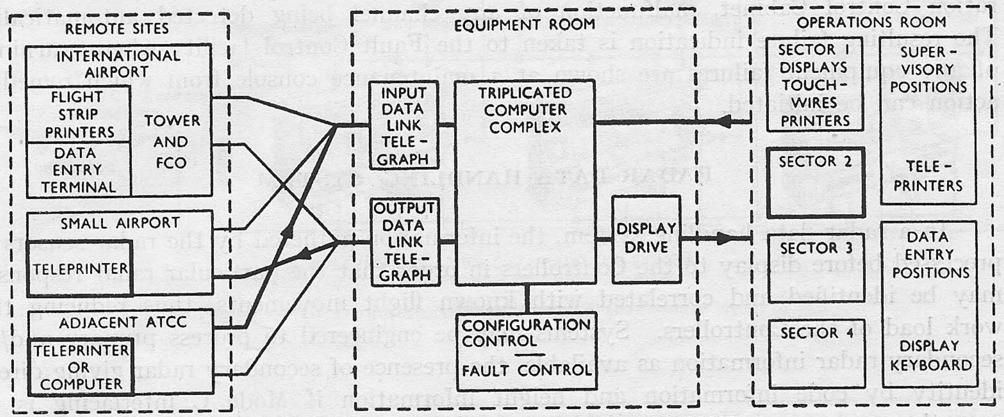

INBOUND FLIGHT FROM ADJACENT ATCC TO SMALL AIRPORT

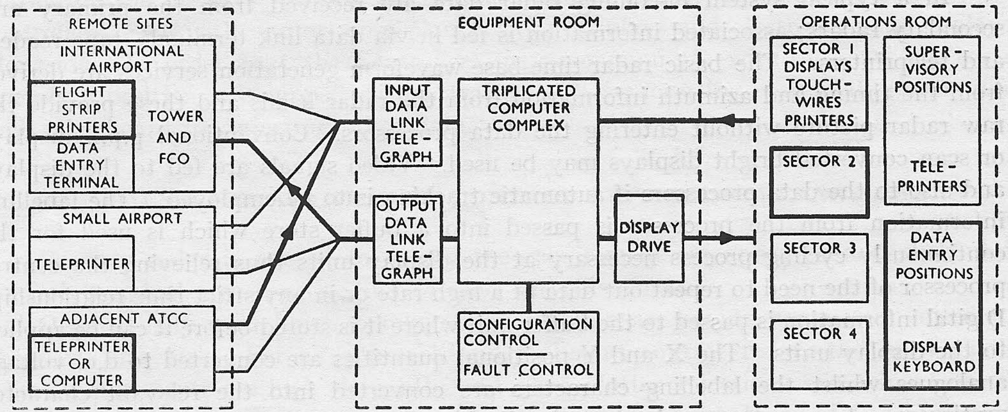

INBOUND FLIGHT FROM ADJACENT ATCC TO INTERNATIONAL AIRPORT-FLIGHT PLAN CHANGE AIR-FILED

Fig. 2 — Typical operational sequences

planned movements and amend ments made by the Controllers during the control phase are stored for future reference in exercises or enquiries.

In the original system design, a central computer complex was connected to flight strip printers and electronic data displays both locally by direct connection and remotely at Heathrow and Gatwick Airports via data links. Subsequently the requirement for connection to flight strip printers, to Heathrow and Gatwick was withdrawn, the system being completely devoted to Middle Air Space Control. To obtain the required level of reliability, a triplicated system is provided, three identical computers operating simultaneously on the same problem with majority voting to confirm the correct answer. Each computer is supported by bulk storage in the form of two magnetic disc stores with interfaces to the computer through the disc store controllers. Communication with the computer from the controllers' electronic data displays, keyboards and touch wire input devices are made through special purpose peripheral cabinets. In these cabinets the various services are collected together into convenient modules to match the computer data highways. To establish correct operation of each computer, the outputs from all three units are compared in the System Configuration Control Cabinet, malfunction of any channel being detected automatically. The resulting failure indication is taken to the Fault Control facility where warnings of any equipment failures are shown at a maintenance console from which remedial action can be initiated.

RADAR DATA HANDLING SYSTEM

In a radar data handling system, the information gathered by the radar sensors is processed before display to the Controllers in order that the particular radar responses may be identified and correlated with known flight movements, thus reducing the work load of the Controllers. Systems may be engineered to process primary and/or secondary radar information as available, the presence of secondary radar giving direct identity by code information and height information if Mode C interlacing is in operation.

In a typical system in-coming radar data are received from the primary and secondary radars; associated information is fed in via data link terminals, tape readers and teleprinters. The basic radar time-base waveform generation services are derived from the timing and azimuth information from the radar heads and these provide the raw radar picture without entering the data processors. Conventional p.p.i. displays or scan converted bright displays may be used. Video signals are fed to the displays and also to the data processors if automatic tracking is to be employed. The labelling information from the processor is passed into a buffer store which is used for the continuously cycling process necessary at the display units thus relieving the central processor of the need to repeat out data at a high rate or in any strict time relationship. Digital information is passed to the buffer unit where it is stored before it can be applied to the display units. The X and Y positional quantities are converted to d.c. voltage analogues whilst the labelling characters are converted into the relevant character writing waveforms when received at the displays. The same buffer unit also provides marking signals for the electronic data display facility. Again, its purpose is to reduce the output loading on the data processor and to carry out the necessary decoding

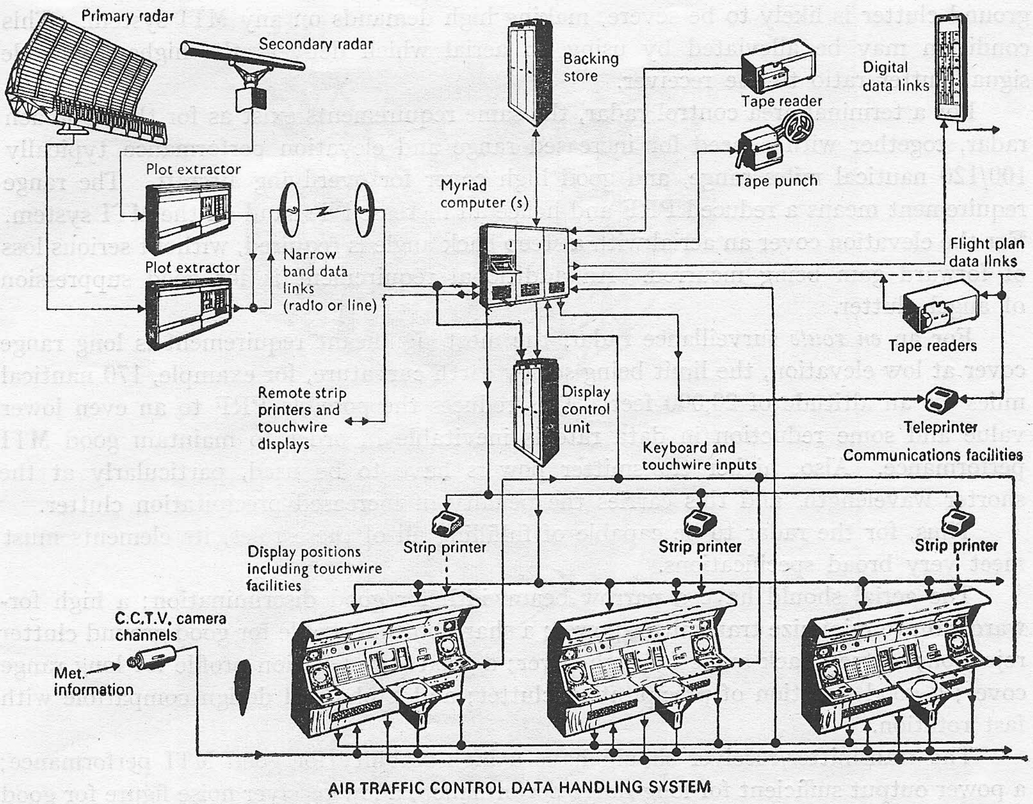

Fig. 3 — Air traffic control radar data processing system

processes. The buffer units then operate on a repetitive cycle to produce the information on the displays. Composite console positions are normally used for the radar controllers, each with one or more plan position displays and electronic data displays alongside. In order that the Controllers may communicate with the machine, each operating position is equipped with a tracker ball for inserting positional information and a keyboard for injecting other data.

EQUIPMENT FOR AIR TRAFFIC CONTROL SYSTEMS — PRIMARY RADAR

Primary radar is needed to satisfy the requirements of approach and outbound control; terminal area control; and *en route* surveillance.

Operationally each function requires an ideal radar, having parameters suited to the particular task. For an approach and outbound control radar, the most significant requirements are high data rate and good clutter rejection. To achieve satisfactory performance, a rotation rate of 15 rev/min, a range capability of 40/60 nautical miles and a beamwidth of between 1·5 and 2·0 degrees are typical values required, leading to a high PRF. Because of the short range and low elevation cover required, ground clutter is likely to be severe, making high demands on any MTI system. This condition may be alleviated by using an aerial which delivers the highest possible signal/clutter ratio to the receiver.

For a terminal area control radar, the same requirements exist as for the approach radar, together with a need for increased range and elevation performance, typically 100/120 nautical miles range, and good high cover for overflying aircraft. The range requirement means a reduced PRF and hence an increased demand on the MTI system. For the elevation cover an aerial with a steep back angle is required, without serious loss of forward gain being incurred. An additional requirement is for good suppression of angel clutter.

For an *en route* surveillance radar, the most significant requirement is long range cover at low elevation, the limit being set by earth curvature, for example, 170 nautical miles for an altitude of 20,000 feet. This reduces the possible PRF to an even lower value and some reduction in data rate is inevitable in order to maintain good MTI performance. Also, higher transmitter powers have to be used, particularly at the shorter wavelength, and this carries the penalty of increased precipitation clutter.

Thus, for the radar to be capable of fulfilling all of these roles, its elements must meet very broad specifications.

The aerial should have a narrow beamwidth for good discrimination; a high forward gain to minimize transmitter power; a sharp bottom profile for good ground clutter rejection; a steep back angle for high cover; a good low elevation profile for long range cover; a good rejection of precipitation clutter; and a physical design compatible with fast rotation.

The transmitter/receiver should have a high stability for good MTI performance; a power output sufficient for long range performance; a low receiver noise figure for good range performance; a wide range of pulse widths; and a wide acceptance of PRF.

The signal processor should have an MTI performance which does not set the overall system limit; protection against precipitation clutter; protection against anomalous propagation clutter; protection against second-time-round returns; protection against interference from other radars; protection against blind speeds; protection against tangential fading; and a high stability trigger source.

Some of these requirements are mutually incompatible but with careful design, a compromise in one area may be offset by superior performance in another.

In the past the requirement for approach and outbound control radars to have a narrow beam width, good range resolution, i.e. short pulse length and a high data rate led to the widespread use of 'S' band (10 cm) equipment for this role. At this frequency the aerial assembly is relatively small and light in weight and the capital cost within limited Air Traffic Control equipment budgets. Limitations in performance due to poor MTI capability at this frequency and little protection against precipitation returns were accepted as an inevitable penalty.

On the other hand, the requirement for terminal and *en route* surveillance called for higher power equipment and better low elevation performance. Hencet he need for improved MTI and clutter rejection was greater and recourse was taken to the longer wavelengths of 'L' band 23 and 50 cm. Highly stable MTI performance is possible by adopting the 50 cm wavelength where a fully coherent system is practical. These techniques are employed in the Marconi S264 which has formed the major portion

Fig. 4 — 23 cm Radar S654 — example of modern 'L' band equipment with twin horn aerial feed

of the United Kingdom Airways surveillance network and has been chosen for difficult mountainous regions in Switzerland, Iran, Hong Kong and New Zealand. At this frequency the equipment also enjoys a natural improvement of 28 db in reduction of returns from rain compared with a system operating at 'S' band.

In some countries, notably in North America, there are no radio frequency allocations for navigational equipment in the 600 MHz range, it being allocated to broadcast television services. As a result their Air Route Surveillance Radars have utilized the 23 cm 'L' band equipment.

Recently, introductions of staggered PRF operation to reduce the number of blind velocity ranges and improved stability obtained from solid state circuitry in digital MTI systems have made significant improvements in the performance of 23 cm radars. In addition, the signal to clutter ratio for short range targets has been enhanced by the use of a second receiving horn on the aerial assembly. The vertical polar diagram for this ancillary horn is swept up from the area of ground returns. A solid

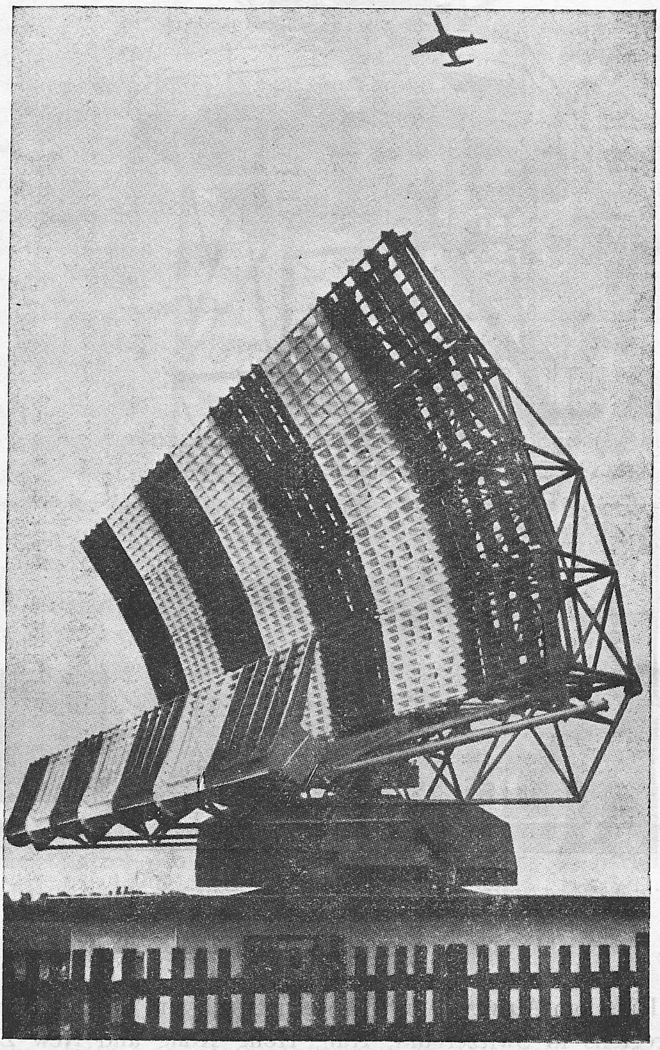

Fig. 5 — 50 cm Radar S264 — mainstay of UK air traffic control surveillance network and widely used in many parts of the world

state switch operates to select the signals from the ancillary horn for the first 20-30 miles of surveyed range and signals from the main horn for the remainder of the time base range. The Marconi S654 Air Traffic Control Radar is an example of this type of radar. It has an aerial array 32 ft wide by 19 ft high fitted with the twin horn feed. Two transmitters may be operated simultaneously in frequency diversity, each one delivering 2 megawatts peak power. The power source is a completely re-designed magnetron which utilizes vapour phase cooling, to stabilize its operating conditions. This, together with a stabilized modulator and a system of tuning the magnetron to a crystal reference lead to the considerably improved MTI performance which is necessary for Air Traffic Control purposes.

DIGITAL MTI EQUIPMENT

Moving target indication in radar systems is achieved by removing fixed target responses in a cancellation unit which stores the signals obtained due to one transmission pulse and comparing with those obtained from the next transmission pulse. To achieve a better level of cancellation this process is usually extended to a further stage of comparison with the succeeding transmission. The delay required in the storage element is of the order of milliseconds, the exact value depending upon the application of the radar. Until recently the delay has been provided by means of an ultrasonic delay cell, the delay medium being mercury, quartz or even distilled water. Signals injected into this medium were amplified, compared and controlled by analogue techniques and were very critical of careful setting up and temperature control.

With the general advances in solid state circuitry it is now possible to adopt digital storage techniques for this purpose. From an operational point of view there are several advantages to be gained by this approach:

(i) The main advantage is flexibility in the variation of pulse recurrence frequency. In the ultrasonic delay line timing is tied strictly to the delay line supplied and all radars working together must be absolutely locked to the same line. The digital system is not critical in this respect and the PRF may be changed to suit the particular application and to avoid interference from adjacent radars.

(ii) The greater flexibility of PRF allows the free use of several different stagger ratios and by suitable selection it is possible to eliminate blind velocities within the expected aircraft speed range.

(iii) When the returned signals are compared with one phase of the reference oscillator in a phase sensitive detector blind phase conditions, i.e. when zero output occurs, result in the loss of some signals. By inclusion of a second channel, fed with a quadrature signal from the reference oscillator and combination of both outputs, these blind phase conditions can be eliminated.

(iv) The digital equipment is not sensitive to the ambient temperature variations which often caused considerable deterioration in performance of analogue systems.

(v) Although the canceller is only one of the items which require to be highly stable in an MTI system this particular element will be more stable if digital techniques are employed.

(vi) Better reliability is predicted because such a unit can use semi-conductor integrated circuits throughout.

ELIMINATION OF BLIND VELOCITIES

At this point the advantage mentioned in (ii) is felt to justify some further explanation. In a radar system operating at a fixed PRF there will be blind velocities in the MTI cancellation response characteristic corresponding to each velocity for which the successive returns have shifted by one complete wavelength of the radar frequency. These blind velocities are given by

$$V = 0{\cdot}0097\ n.\lambda.f_r$$

where V is radial velocity in knots; λ, wavelength in cm; f_r, PRF in pulses per sec.; and n, any integer including zero.

For an 'L' Band radar at a PRF of 300 there is a blind spot at every 67 knot increment of radial velocity.

If the system is fitted with circuits to allow the spacing between pulses to be staggered, this is effectively the same as using more than one fixed PRF radar and by adding the characteristics there is only one absolute null when all the zero points coincide. For example, by selecting a ratio of 10:11:12 then the first true blind speed will be beyond the range of normal civil aircraft but the characteristic will have deep troughs with losses of greater than 10 db.

By making a more complicated stagger pattern as becomes feasible with digital MTI, it is possible to move the first real blind velocity well outside the limits of aircraft operating speeds. An optimization process run on a computer programme has shown that a six-ratio stagger selection can give a characteristic with losses at no point greater than 4 db in the velocity range of interest.

DIGITAL MTI EQUIPMENT FEATURES

The main features of a typical digital MTI system are summarized as follows: (i) Store system, MOS shift registers; (ii) cancellation, double; (iii) analogue-digital conversion, 256 levels (8 bit); (iv) cancellation ratio, 40 db; (v) Tx pulse duration, 2-5 microsec.; (vi) sampling rate, variable; (vii) associated features: (a) CFAR circuits, (b) pulse recurrence frequency discrimination stores, and (c) ghosting facility for operator use to restore outline impression of clutter.

In this system the IF signal from the radar receiver passes through a limiting amplifier into two-phase detectors, one using the reference phase from the coho (coherent oscillator), whilst the second takes the reference phase through a 90° phase shift network. The outputs from the phase detectors are converted into digital form in 8-bit analogue to digital converters and then passed into the storage circuits of the canceller, the data being recirculated for a double cancellation process. Outputs from the two cancellers pass into a combining stage and thence through a log/PLD amplifier which produces CFAR conditions. The unprocessed linear and log video signals also pass through analogue to digital converters, PLD being applied to the logarithmic channel. The linear channel includes a clutter switch signal amplitude detector which controls signal selection into the Pulse Recurrence Frequency Discrimination and De-Stagger circuits. After this stage of processing the digital signals are (a) fed out directly to a plot extractor, and (b) re-converted into analogue form for distribution to display systems.

PLOT EXTRACTION EQUIPMENT

Another system component available for extending the automation of Air Traffic Control is the plot extraction equipment which operates directly on the received radar signals and provides an output message indicated when the criteria for an aircraft response has been met. Considering its operational role there are distinct uses for plot extraction: (i) Data transfer from remote radars; (ii) data processing for display purposes only, as adopted in some Air Traffic Control applications; and (iii) data processing for automatic tracking and future position prediction as required in comprehensive Air Traffic Control and Air Defence applications.

In these various roles there are certain advantages: (a) Bandwidth compression for remote data transmission so simplifying the data link requirements; (b) greater flexibility in the deployment of remote radars resulting from the previous statement; (c) the data from the plot extractor are directly available in a form suitable for processing in a digital computer; and (d) a synthetic display of much greater brightness is possible.

On the other hand there are some disadvantages which must be recognized and accepted: (a) The 'raw' radar picture is lost. (b) With the loss of the 'raw' radar picture the operators valuable capacity for pattern recognition to help in track continuity detection, weather clutter and interference rejection has also gone. (c) Saturation conditions must be acknowledged. The amount of information will be limited to the capacity of the link. (d) In order to keep below saturation conditions the machine will have to adjust its operation and it may well reject useful information.

FUNCTION OF THE PLOT EXTRACTOR

Analysis of a radar picture shows that it contains an enormous amount of information. The display represents the contents of a multitude of resolution cells, the size of each cell being defined by the radar parameters, i.e. pulse length, PRF and beam width. On a typical radar screen in an Air Traffic Control environment one may expect to find: (a) Returns from aircraft within the radar cover out to, say, 100-200 miles depending upon the application; (b) clutter echoes due to local ground returns; (c) other clutter echoes due to anamolous propagation conditions bringing responses from distant coastal areas or land masses; (d) clutter echoes known as ' angels ', and shown to result from various causes including birds, atmospheric discontinuities, etc.; and (e) interference from other adjacent radars or electronic equipment.

Most of the signals the human operator rejects by his powers of pattern recognition based on integration which takes place over several scans on the cathode ray tube phosphor. With a plot extractor its function is to take in all the information and reject most of it in a trace to trace correlation process. The signals entering the radar receiver consist of a series of discrete returns in a background of thermal noise and only by recognizing a suitable combination can they be considered to represent an aircraft response. As the radar beam sweeps through the arc of azimuth containing an aircraft, the signal responses due to that aircraft vary in amplitude and by settling a threshold it can be said that a signal above that limit represents a ' strike ' which may be of importance. If successive traces of the radar returns contain ' strikes ' at the same range

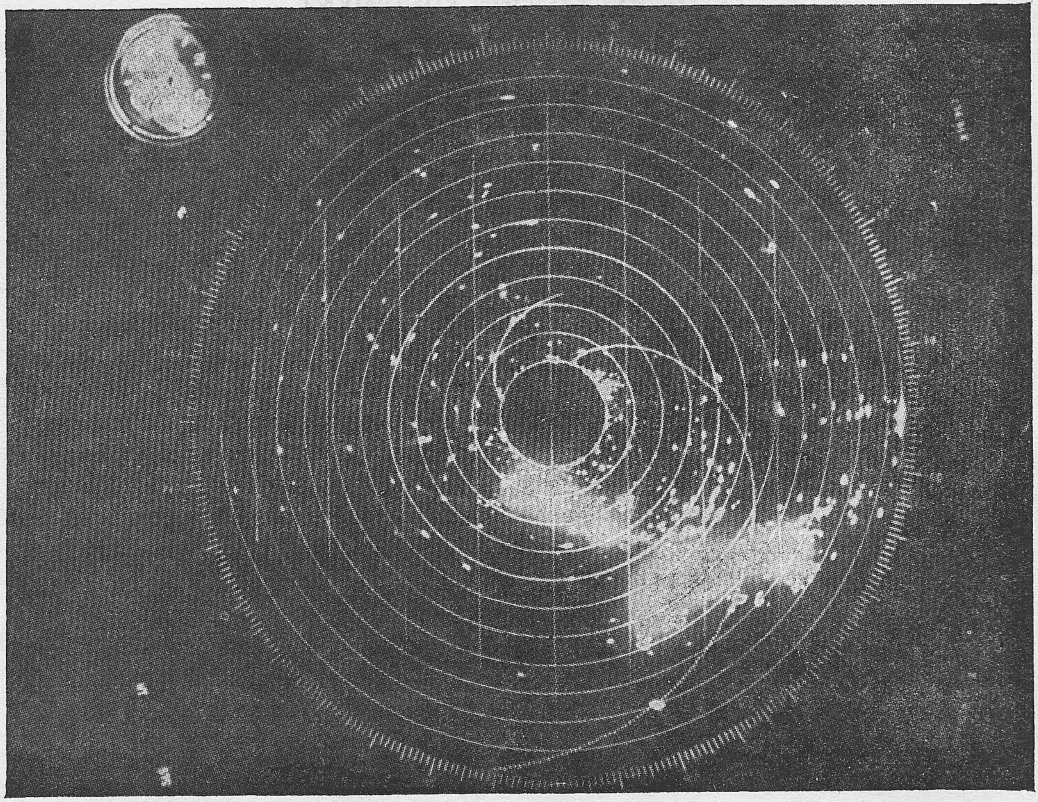

Fig. 6 — A typical radar plan position display including returns from live aircraft together with interference due to ground returns, anomalous propagation 'angels' and adjacent radars

then an 'echo' or 'plot' may be said to exist but if the number of successive responses exceeds the quantity expected from a point target then the response must be due to a larger mass such as terrain features or cloud. The response must, therefore, be assessed in terms of two thresholds, one amplitude and the other azimuth run length.

TYPES OF PLOT EXTRACTOR

There are two different methods used in the plot extractors currently in manufacture by various companies. One method, of which there are many variants, uses a 'sliding window' or Swerling Integrator which is coupled with a range store having a range quantum of fixed length say $\frac{1}{8}$ or $\frac{1}{4}$ mile and a store location is allocated for each quantum to the maximum range of the system. The subsequent information is built up in successive planes of storage as the aerial passes through the target bearing. A criterion of acceptance is established by looking for m out of n pulses to recognize the start and finish of a group of strikes which are considered to be an echo or plot. The number of strikes is subject to logical interpolation to extract the effective azimuth and range of the target centroid and these values are then transmitted to the display and data handling system. Unfortunately, this technique suffers from the defect that where overlap occurs over a number of range quanta more than one target is assumed and track splitting is difficult to avoid.

The second system has an incremental range clock giving a range count and when a signal crosses a set threshold it takes the range count at that instant and stores it away for correlation. This technique has several advantages because it allows more processing, on a logical basis, to search for the expected pattern of strikes. To study this technique a system has been built embodying a computer to perform most of the logical functions. Modification of the logic was achieved by simply changing the software and extensive investigation of the behaviour of different methods was possible by this research tool. As a result of this work a final design for a hardware extractor has been established and the solution adopted performs the following functions: (a) Analogue or digital strike extraction to accept signals from either a conventional radar receiver or from a digital MTI system; (b) plot forming to form plots by association of the extracted radar strikes according to pre-set criteria; (c) plot bearing calculation to extract the plot centroid from the plot and aerial bearing data; and (d) test target generation for on-line testing.

The strike extraction circuits include a fast acting threshold control which reacts to signal density and controls the threshold in areas of clutter. Where excessive clutter exists automatic switching to the MTI cancelled signals occurs. A further slow acting threshold derived from the Strike False Alarm Probability control operates in combination with the fast acting threshold to maintain maximum sensitivity for a pre-set false alarm rate independent of input signal to noise ratio or peak signal ratio.

Plot forming is carried out against criteria which are independently adjustable for plot leading edge, i.e. start, plot trailing edge, i.e. finish, plot maximum run length, i.e. number of strikes and range variation over which dispersion of range of in-coming plots is acceptable in the correlation process. All the plot data are stored in an MOS shift register store, sufficient storage being provided for some 256 partial plots to be processed at any time. After a valid plot has been established its position in range and bearing is computed in the plot bearing calculator and these data are output as a serial digital message suitable for transfer by a narrow band data link. Optimum loading of the data link is achieved by a data buffer which takes account of variations in plot density.

Similar techniques are also applied to secondary radar signals except that storage of mode and code information is part of the system and the logic must take account of mode interlacing when operative. In a combined primary and secondary plot extraction the information from the two systems may be correlated so that the output message consists of primary azimuth data, which is more accurate, coupled with secondary mode, code and range data.

AUTOMATIC TRACKING

Having established the existence of a plot within the criteria obtaining in a particular radar then its presence may be compared with subsequent plots on further rotations of the aerial to ascertain whether a continuous track exists. This process may be carried out by a digital computer in the radar data processing system, successive plots being used in calculations to provide information on the speed and heading of the track established. Future plots are then correlated with the predicted positions of the established tracks and provide the basis for auto-initiation of tracks and automatic track following in more comprehensive systems for air defence or air traffic control. In the case of civil aircraft where known flight movements are expected this fact can be recognized and changes in course over reporting points can be recognized in more sophisticated search routines. As the flexible and complex logic of a digital computer can be applied to this part of automatic tracking it has the advantage that such search patterns may be altered by programme change after the equipment has gone into service. Where SSR or 3D radars are available the automatic tracking can also take height into account in the search routine thus increasing the certainty of tracking.

DISPLAY AND DATA HANDLING SUB-SYSTEM

To handle the requirement of the high traffic density Air Traffic Control centre all the routing of information within the system and control of data presented at the various control positions may be controlled by a digital computer; this may be the same machine as the one used for automatic tracking or a similar computer. The use of a number of similar smaller machines to make up an overall system provides a useful measure of standby in that if one machine fails the remainder can revert to an alternative programme maintaining a lower level of facilities. Alternatively, if specified facilities must be maintained continuously, one spare machine can act as standby for a number of operational units.

DISPLAY EQUIPMENT

One of the main functions controlled by the data processing system is the presentation of information on display units which may show marked raw radar, synthetic track data or tabulated information.

The same type of modern fixed coil display is capable of providing pictures of any of the forms simply by applying the appropriate waveforms. For a marked radar display the deflection waveforms consist of the resolved timebase waveforms mixed with computed deflection data interrupting the radar timebase; for a purely synthetic picture the deflection waveforms consist of a sequence of step functions, each step representing the coordinates for the next mark in the sequence. At the same time character generating waveforms are fed in to produce the alpha-numeric information on the screen.

Display techniques for data presentation have advanced considerably over the past few years. When marked radar pictures were first produced limitations in performance of power drive transistors made it necessary to employ a dual deflection coil system in which auxiliary coils, mounted at the rear of the main deflection coils, were used to provide character information. The main deflection circuits provided good sensitivity for rapid full diameter transitions but the bandwidth was limited whilst the auxiliary deflection amplifiers had a limited aperture but a wide bandwidth, up to 2 MHz being required for faithful character presentation. Settling from a full diameter deflection to within 0·1 per cent typically occupied 50-100 microseconds. Recent advances in higher power handling transistors capable of efficient operation at higher frequencies has made possible a series of displays utilizing a single deflection coil system for all deflections, i.e. main scan, line drawing and character writing. With these displays a full diameter deflection can be achieved within 10-15 microseconds and an alpha-numeric character written in less than 5 microseconds, hence the system is capable of writing either much more information or repeating the same information more frequently, thus eliminating unpleasant flicker effects.

At the same time advances in manufacturing techniques have made possible the production of printed circuit windings suitable for deflection coils and the final design becomes more accurately repeatable in batch production ensuring improved orthogonality and linearity in the final picture.

The video amplifier employed in these displays normally allows for a number of different video signal inputs and several different marking inputs to be accommodated so the displays are more flexible and may be used for: (a) raw radar; (b) marked raw radar with superimposed data; (c) purely synthetic presentation from digital data processors or plot extractors; and (d) scan converted pictures using television raster techniques. All these advances have occurred as circuit components have been reducing in size and now a considerable part of the display complex can be housed within the display framework itself giving a greater degree of autonomy and system reliability.

DISPLAY PROCESSING

Control of the data to be presented on the PPI display frequently requires a measure of processing to correlate coordinates where more than one source of information is available and to filter only those items of interest as selected for a particular user. In addition, to maintain a persistent picture on the PPI display the information displayed should be repeated at a repetition rate of say 25 Hz or more, although many earlier systems operated at a much lower refresh rate. The output to the display system consists of a number of words of digital data giving X and Y positions of the position to be labelled, a group of character information and bright up control signals for display addressing. In a simple scheme where the data processing computer is capable of including the display control directly in its programme then a buffer comprising registers which hold the data until the display operation has been effected and then demand further data is sufficient.

Such a system makes heavy demands on central processor time and in a more complex scheme the load is unacceptable. In this case a display control unit or small local processor dedicated to operate with a single display or a small group of displays provides the necessary buffer storage and control of display selection functions. It may also be used to carry out expansion and off-centering for a digital display system, eliminating all tracks not within the area being covered by a particular display, thus conserving marking time and minimizing loss of raw radar information. The local processor operates on an independent continuous cycle furnishing labelling information to the displays. For display of the type previously described 15 microseconds is allowed for main deflection transitions and 5 microseconds for each character so a labelling plaque consisting of 2 rows of 7 characters per row requires approximately 100 microseconds. With a repetition rate of 25 Hz to maintain a persistent picture it will be seen that up to 400 groups could be included in a synthetic display cycle of this type.

DISPLAY WAVEFORM GENERATION

The generation of the basic radar timebase waveforms which produce a rotating radial trace on the PPI display may be achieved by analogue techniques, e.g. a sine-cosine potentiometer rotating on the aerial shaft will produce slowly varying voltages corresponding to the sine and cosine of the radar beam azimuth angle and these voltages then become the aiming point for a pair of integrators. The integrator timing is such that a sawtooth waveform of duration equal to the radar pulse travelling time for maximum range of interest is generated and fed to the deflection coils. Insertion of marker information is achieved by taking the X and Y positional information from the display processor into a twin channel digital to analogue converter to produce the main deflection shift voltage whilst the character instructions are routed to a character generator. Radar scan to marker electronic switches in X and Y channels select between scan and marker. In this system it will be noted that separate analogue channels are involved up to the final switches and, therefore, any d.c. drift or d.c. error voltages will affect the registration between the two channels thus necessitating careful setting up and regular checking.

An alternative method now possible because of modern digital components is a time base created by purely digital techniques. An encoder mounted on the aerial passes a pure binary or Gray code value for azimuth into a digital resolver which converts into sine and cosine quantities of 13 bit accuracy. The two outputs from the resolver then modulate timebase counter circuits such that the X and Y components of the timebase are represented as two-digital quantities. Switching between these signals and the digital information from the display processor is then carried out before application to the final digital to analogue convertors which feed the deflection system. By this means all sweep generation and marker information remains in digital form so long as it remains in separate circuits and the accuracy of registration is maintained to the basic system limits. Variation of the analogue circuits in the deflection amplifiers will only result in movement of the entire picture.

CHARACTER GENERATION

Character writing on the face of a cathode ray tube may be achieved by several different methods: (a) shaped beam techniques such as the Charactron in which the beam passes through a shaping mask; (b) monoscope in which a mask is scanned by a raster to produce video signals; (c) raster generator using delay lines or shift registers to modulate a localized small area raster; and (d) stroke writing generator using incremental integrators.

Of these the last method is probably capable of the best character clarity and greatest flexibility. In a typical system the characters are formed by deflecting the beam along the sides of an imaginary 4×4 square matrix. Each character is formed in 16 short segments which are ample to form characters with a clarity approaching that of a typewriter. The X and Y character waveforms are produced by two integrators which receive digital signals derived from matrices controlled by timing waveforms and character instruction signals. These provide 16 time steps of positive, negative or zero input to each integrator. Two steps are used to clamp the integrators to the central position and two steps are blanked during the initial step to the character starting point. Where characters do not use the full writing time these are prematurely blanked to avoid overwriting. A number of characters such as V and W cannot be formed accurately if only 45° diagonals are used so a half rate facility is included to give segments at 22½° to the vertical where required.

ELECTRONIC TABULAR DISPLAYS

Whilst the synthetic display gives a dynamic picture of the aircraft in plan position, the amount of information that can be displayed on each track is limited and reference must be made to the flight plan information. Cross-reference between the conventional paper strips and a radar display involves problems in illumination and a more convenient form of display for stored information is the electronic tabular display or electronic data display (EDDS). The displayed picture consists of a number of characters arranged in horizontal lines and spaced to provide a tabular format. Information on aircraft identity, type, flight level, times over reporting points and estimated times of arrival can all be presented in this way. Displays of this type are included in the Mediator system now installed at the London Air Traffic Control Centre.

The display techniques involved are similar to those described for the marked radar or synthetic displays and the display processor can provide buffer storage and display control facilities for both types of display. Displays using cathode ray tubes of 8½, 11, 14, 17 and 21 in. diagonal dimensions have been supplied, the smaller sizes are essentially private users displays intended for the individual seated operator whilst the larger ones can be used for remote or group viewing.

As a system the electronic tabular displays offer a number of advantages over the arrangements using electromechanical indicators, digitrons or 'Nixie' tubes. It is much more flexible in that the format can be changed readily simply by changing the instructions in the display processor; the display unit itself is a replaceable item and can be removed for servicing more readily than large electromechanical panels; it is quiet in operation and since it is all electronic it is more reliable and last, but not least, in situations where a large amount of data is to be displayed it is significantly cheaper.

BRIGHT DISPLAYS

The light output from the conventional radar plan position display is limited by the slow repetition rate and the need to use a phosphor with a long afterglow characteristic. This has meant that such displays must be viewed in conditions of low ambient lighting or with special complementary lighting. Such operating conditions are undesirable psychologically and disliked by the controllers. Alternatively, in situations where a view of the airfield and its surroundings is essential viewing hoods and shields are used but this is inefficient because time must be allowed for the human eye to adjust itself to the change in light level.

In consequence much work has been done to obtain bright displays and various approaches have been investigated including scan conversion, direct view storage tubes, electroluminescent panels and light amplifiers. Of these the first two have reached a stage of practical application.

RADAR TO TELEVISION SCAN CONVERSION

In this form of display the slowly rotating radar trace is converted into high speed line scan television by means of a conversion tube. The bombardment induced conductivity tube is used for this purpose, it consists of a double gun tube, one mounted at each end and both scanning a target mounted centrally in the structure. The target consists of a thin sheet of insulator facing the reading gun backed by an extremely thin metal back plate on the writing side. It is normally operated at approximately earth potential, about −10 kV being applied to the radar writing gun and about −1·5 kV to the television reading scan. The collector ring, from which the output signal is taken is maintained at approximately +50 V. The thin insulator section is the storage layer and it is made of aluminium oxide or similar material which readily emits secondary electrons. It also acts as the dielectric of the capacitor formed by the emitting surface of the layer and the metal backing. When the reading beams scan the target secondary electrons are emitted; the velocity is sufficiently high to cause the secondary emission from this surface to be greater than unity. The target surface charges positively towards the collector potential until the potential difference is a few volts at which point the electron emission stabilizes. Under these conditions a difference potential of say 45 V exists between the front and rear surfaces of the target. If the high velocity beam is turned on it is able to penetrate the target and induce conductivity through the insulating material. The front surface potential is, therefore, lowered towards that of the back plate, to a level dependent upon the writing beam current. By this means the front surface has traced on it a relatively negative pattern corresponding to the radar signal. Now when the reading beam scans these areas secondary emission will again take place and the emitted electrons will be attracted to the collector ring to provide the output signal current. The output signal will thus be synchronized to the television scan. By virtue of the secondary emission, the reading beam slowly erases the stored charge pattern, but because the charge removed per scan is very small and due to the large capacitance between the front and back surface of the aluminium oxide layer a large number of reading scans is required before the stored pattern is removed completely. This gives persistence of previous data in a similar manner to the afterglow on the conventional displays.

This method of producing a bright display has certain advantages in that techniques already applied in entertainment television can be used for mixing signals and presenting a mosaic picture from a number of radars. On the other hand, it has a number of disadvantages since all operators must view the same picture unless several converters are installed. Although resolution in the order of 1000 lines is now possible any expansion on individual displays would degrade it inversely proportional to the expansion factor.

If marking is carried out on the writing side because this gives the best accuracy then all operators get the same markers. Marking on the reading side is less accurate and complex in implementation. Also, the cost of each converter is high, therefore, it is expensive to provide greater flexibility by adding more channels.

DIRECT VIEW STORAGE TUBE

Another method of producing a bright display is by use of a direct view storage tube. The viewing screen is a normal phosphor capable of high brightness, up to 2000 feet lamberts being obtainable. Immediately behind the phosphor is placed an extremely fine storage mesh coated with insulating material. The DVST has two electron gun assemblies, one a conventional writing gun and the other a flood gun. The flood gun electrons illuminate the whole screen and their velocity is such that the secondary emission ratio is less than unity. As a result, in the absence of the writing beam, a negative charge is built up on the mesh surface until it becomes stabilized at about the flood gun cathode potential. If the potential of the storage mesh is made negative with respect to the cathode then the flood beam electrons are repelled and fall upon the collector. The writing beam velocity is such that when it strikes the mesh secondary electrons are released and the mesh is discharged in the areas where video signals occur.

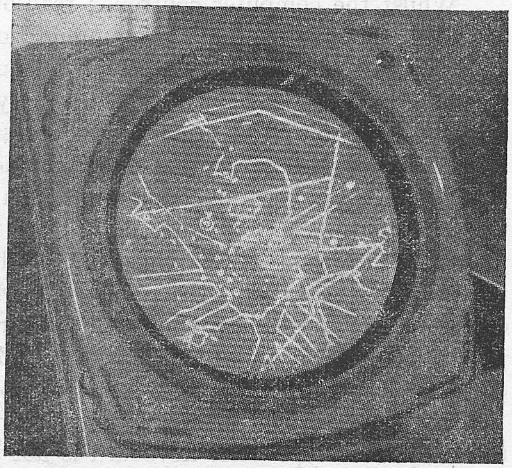

Fig. 7 — An operational display unit embodying the 11 in. direct view storage tube. Displays of this type provide a very bright radar picture in control towers where a high ambient light level is inevitable

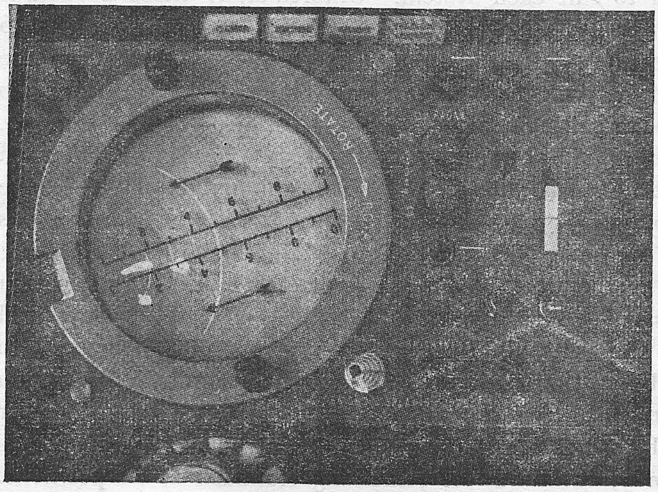

Fig. 8 — Five inch direct view storage tube in use in the role of a distance from threshold indicator (DFTI) in an air traffic control tower. The picture shows the final 10 miles of aircraft approach to touch down

At these points the flood beam penetrates the mesh and continuously illuminates the viewing phosphor. The persistence of such areas of illumination is controlled by slowly discharging the mesh by a train of erase pulses. This provides a picture similar to the conventional radar display but many times brighter.

At present 5 and 11 in. diameter direct view storage tubes are incorporated in displays designed for airfield control towers and many of these units are in service. The small display is arranged to give an off-centred picture of the final 10 miles of the approach to an airport, the off-centering being set to suit the runway in use. In this role it is known as a DFTI (distance from threshold indicator). The 11 in. diameter display is used as a normal plan position indicator with all the advantages of flexibility of independent control under full daylight conditions.

MAN-MACHINE COMMUNICATIONS

Whilst the computer controlled read-out of data on to cathode ray tube displays provides a flexible method of communication between the air traffic computer complex and the controller there is a need for an equally effective method of feeding instructions from the man to the machine. Over the years several techniques have been used and improvements in this direction are still necessary if one is to achieve the maximum benefit from the enormous computing power provided by a modern data processing system.

For entry of positional information in terms of X and Y coordinates two main forms of controller, each with an in-built resolver mechanism, have been used, first joystick controls in which movement of the lever resulting in rotation of X and Y potentiometers and later the rolling ball which drives either potentiometers or digital counters. Of these the rolling ball appears preferable because in its best form it is purely incremental for a digital system and hence need not be referred to any central datum. It is also more robust and reliable.

For entry of control instructions the most readily available form of mechanism, the ubiquitous typewriter keyboard is not a very suitable device to set before a hard pressed controller, so initially special purpose keyboards orientated towards the operational functions were devised to suit each system. Unfortunately these keyboards constrained the system to the limits envisaged in the design stage and it is difficult to deal with changes in the operational system without severe modification of all the keyboards. Furthermore, each entry of data might involve several key operations to define the data, e.g. aircraft type or call sign, time of departure or airport of destination. A much more effective method of entry is by means of a touch wire mask or a light-pen selector which is used to select the next data from a limited choice displayed on the electronic data display. The computer programme includes the train of logical decisions and an adaptive routine leads the controller through an entry sequence by allowing only those selections possible at the time. Thus the controller makes one selection only to define a complete message for such quantities. Analysis of typical operational sequences shows a reduction to the order of 30 per cent of the controller operations to communicate with a computer by such innovations; there is also a significant reduction in the human error in the process. The programmable entry device has a further advantage in that changes to the operational functions can be introduced by alterations to the computer programme only, the hardware remaining standard at all positions.

Technically the touch wire system consists of a number of rows of thin wires mounted in the transparent mask over the face of the cathode ray tube. These wires form part of a balanced capacitive bridge and when touched an unbalance occurs on that particular wire and a signal passes to the computer input system. Adjacent to the points, typically 32 in number, the legend is presented on the cathode ray tube display and for each operation in a sequence the legend is changed appropriately. This technique was evolved as a result of work at the Royal Radar Establishment in the U.K. and equipments embodying these features are now included in the London Air Traffic Control Centre.

The light pen is an alternative method of selecting data seen on the face of the display. In this device a thin cylinder of fibre optic material leads to a light sensitive transistor which converts a change of light into an electrical signal which can be taken away to stimulate a computer peripheral unit. When the light pen is placed near to the display it detects the instant of time at which a particular part of the message is written thus allowing the computer to isolate the selected part.

COMPUTING EQUIPMENT

Computers for Radar Data Processing — When selecting a computer for on-line data processing in conjunction with radar data sources certain features are essential if one is to achieve an effective system. When compared with other industrial or commercial applications it is clear that data becomes available at a much higher rate, e.g. at PRF rate if direct video processing is involved, and the information is changing rapidly so repetitive computation is essential to maintain an up to date picture of the air situation. These factors call for a computer with a fast input-output mechanism.

In addition, the radar data processing system is required to respond to information from several sources, e.g. radar video plot extractors, data links, operators keyboards and tracker ball controls, flight plan input devices, teleprinters, etc., and as the information is frequently of a transient nature the computer must be capable of responding to various stimuli as they are presented and treating certain inputs with a higher priority than others. To meet this demand the computer should have a multi-level interrupt facility allowing a number of external devices to be served with varying levels of priority.

On the other hand, because of the limited accuracy of the data gathering system, typically not better than one part in a thousand, a computer with a limited word length, e.g. 24 bits, will provide adequate accuracy for most operational calculations, in fact a number of systems have been successfully implemented with machines of 16, 18 and 20 bit word structure.

The requirement for high speed operation to match the volume of data available into the radar processor has always meant a demand for a fast cycle time in the computer, most simple machines being limited by the read-write cycle time of ferrite core storage. Over the years the cycle time has reduced from the order of 10 microseconds for a complete read-write cycle down to the region of 750 nanoseconds, and later machines with this type of storage have a powerful capability in the radar environment. To maintain good performance from the computers in which the core store cycle time represents a limitation it is desirable that the full storage complement used in the main

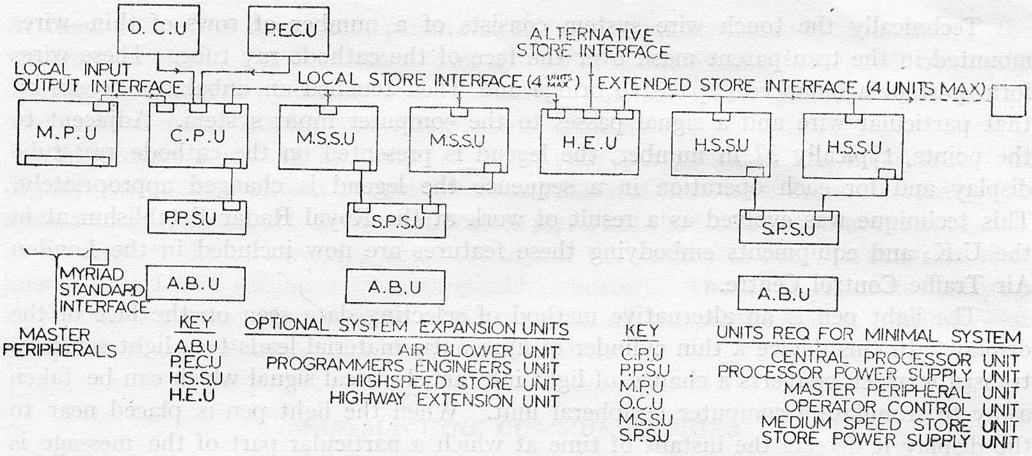

Fig. 9 — Simplified block diagram of a modular computer system designed for radar data handling applications

operational functions should be directly addressable to avoid time lost in recalling data from external storage. Further improvement can be achieved if the computer has an order code which includes micro programmes for a wide variety of logical operations because much of the processing load is concerned with data sorting and correlation rather than pure calculation. Of course, the mathematical functions of multiply, divide and square root can be achieved so much more rapidly by microprogramme than by main programme sub-routines that these functions should also be available in the order code.

In terms of machine construction the computer for on-line applications also differs from its commercial counterpart in that it must be capable of economic integration into a wide variety of different system configurations. Each configuration may call for significant differences in the amount of storage required, the number of peripheral devices to be associated with the computer system and the physical environment in which it will be operated. To meet these needs the computer should be modular in construction so that the central processor can be linked with the number of store units and peripheral devices to suit the particular system. Also, the design of the individual elements must be adequate for operation over a wide range of temperature and humidity conditions.

Some or all of these desirable features are to be found in computers which are now being made by various companies for incorporation as components in OEM (original equipment manufacturers systems. The Myriad III computer is one example, this machine consists of a number of compatible modules, viz. central processor unit; store units (32 K words per unit); operator control unit; programmer/engineers control unit; highway extension unit; master peripheral unit; and power units.

By a suitable combination of these modules a computing complex is established to meet the particular requirement and later extension is possible by adding further modules up to a maximum of 524,288 words.

Another important difference between the computer system as used in Air Traffic Control processing compared with the commercial processor is in the level of reliability which must be established. The reliability demanded from the Flight Plan Processing System at London Air Traffic Control Centre calls for not more than one failure of greater than an hour in duration in five years. To establish system integrity at this level it was calculated that a triplicated system with comprehensive monitoring for failure detection in any part of the three machines was required.

CONCLUSIONS

These notes briefly describe some of the technical developments which can be applied to aid the air traffic controller in his task of ensuring the safe and orderly movement of air traffic. All these facilities are available now as components from which suitable systems can be engineered. Of course, the extent to which they are employed will depend upon the air traffic density or complexity in any particular control zone and the economic consequences of restricting the flow of traffic to that which can be safely handled by simpler methods.

ACKNOWLEDGEMENT

The author wishes to thank the Technical Director of Marconi Radar Systems Limited for permission to present this paper.